Australian Society for Limnology

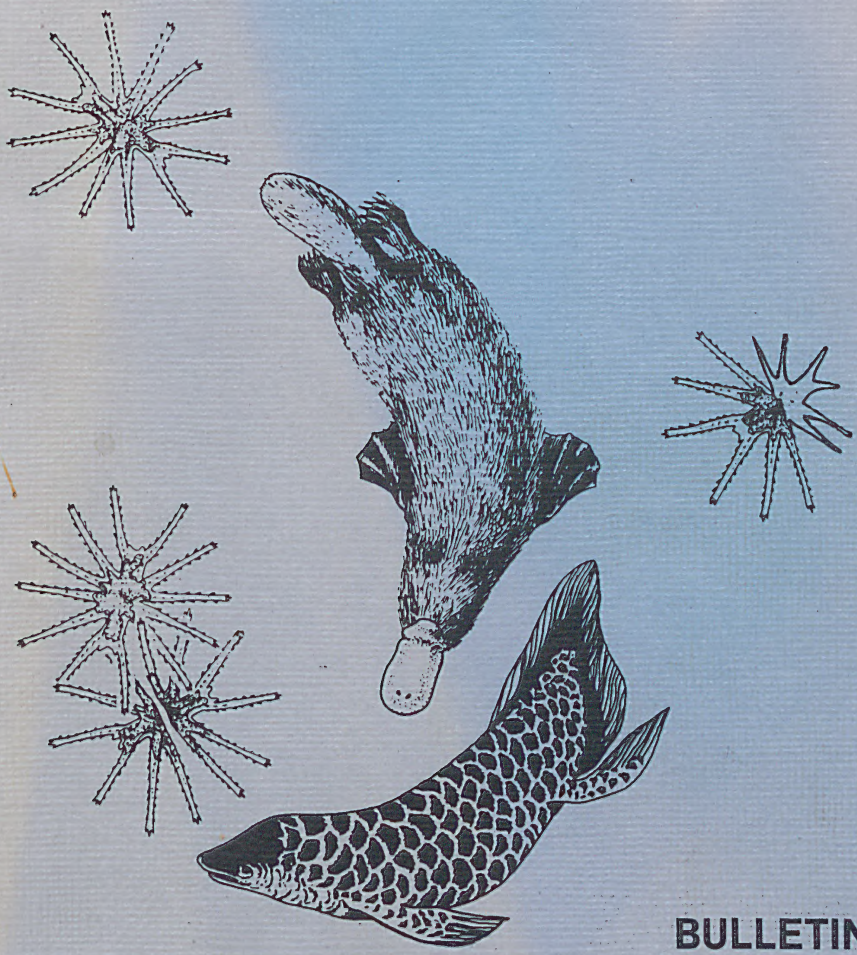

BULLETIN
No. 7

NOTICE TO READERS AND LIBRARIANS

The Bulletin of the Australian Society for Limnology is issued at irregular intervals depending **inter alia** on the availability of papers and the financial state of the Society.

A considerable period has elapsed between the appearance of this number (No.7) and No. 6. For the information of librarians and others the dates of publication of previous numbers are as follows:

No. 1. October, 1969
No. 2. February, 1970
No. 3. December, 1970
No. 4. December, 1971
No. 5. May, 1973
No. 6. May, 1975

Copies of all of these numbers are available from the Society at a cost of A$1.00 for each issue plus postage. Enquiries concerning back numbers should be directed to Mr. I. Campbell, Hon. Sec./Treasurer, Australian Society for Limnology, Department of Chemistry, Caulfield Institute of Technology, P.O. Box 197, Caulfield East, Vic. 3145.

NOTES TO AUTHORS

The *Bulletin* will accept for publication *original contributions,* subject to the following conditions:

1. Papers not directly related to Australia, New Zealand and New Guinea may not be accepted.
2. Taxonomic papers which describe new species will not be accepted unless "type" material has been deposited at an Australian museum and evidence is presented of its Registration.
3. Manuscripts are to be typed, double-spaced and submitted in duplicate.
4. Photographs will be accepted only in exceptional circumstances.
5. Line drawings, graphs, etc., must be kept to a minimum.
6. All papers will be subject to refereeing.
7. Abbreviated titles of journals cited in *"References"* should conform with the *World List of Scientific Periodicals* abbreviations. Papers which do not so conform may be rejected on this ground alone.
8. 25 reprints will be made available to the author free; additional reprints will be provided at cost and must be ordered on acceptance of paper.

AUSTRALIAN SOCIETY FOR LIMNOLOGY
BULLETIN No. 7
APRIL 1980

Edited by I.A.E. Bayly & P.S. Lake

CONTENTS

PLANKTONIC ROTIFERS OF FARM DAMS NEAR GLOUCESTER, N.S.W.

by

Minoru Sudzuki* and B.V. Timms +

Abstract

Thirty-four taxa (4 new to Australia) were identified with an average of 9.6 species per dam. Dominant species were *Brachionus angularis, Keratella* spp, *Polyarthra vulgaris and Pompholyx sulcata.* The taxonomic status of *Brachionus dichotomus* and variability in some characteristics of *Keratella slacki* are discussed.

Introduction

Limnetic zooplankton communities are typically composed of few species; Pennak (1957) gives world average figures of 2.7 copepod, 2.8 cladoceran and 5.5 rotifer species momentarily present. Comparative Australian figures for the crustacean component are available (Bayly & Williams, 1973; Timms, 1968; 1970) but no data have been published on rotifer communities, and in fact, very little is known of the rotifers of Australia (Shiel and Koste, 1979). It is the purpose of this note to list the species found in ten farm dams in the Gloucester district, eastern NSW, and to comment on the momentary species composition of rotifers in their zooplankton. Additionally, the taxonomic status of *Brachionus dichotomus* is discussed and comments made on intraspecific variation in *Keratella slacki.*

The Dams

Ten farm dams in a 40km radius of Gloucester, on the lower north coast of NSW, were visited on the 2nd or 30th September, 1977. Most were small gully dams (5 to 30 X 10^6 1), though two were small excavated dams (1 X 10^6 1) and one was a large private irrigation dam (220 X 10^6 1). Water was opaque in most (Secchi disc values of 3-100cm) but was somewhat clearer (to 250 cm) in the larger dams. In all, the water was neutral to slightly alkaline (pH range: 6.8 - 7.8) and TDS ranged from 56 - 375 ppm. Further data on these and other physicochemical features of dams in the area are given in Timms (1970).

*Biology Laboratory, Nihon Daiguku, Omiya, Japan, 330
+ Avondale College, Cooranbong, NSW, 2265

TABLE 1

Occurrence of rotifers in ten farm dams near Gloucester, N.S.W.
(key: ★★★=very common, ★★=common, ★=present,
S = sexual period)

Species / Dams	Ritters	Perrys	Maslins	Farleys	Isaacs	Atkins	Sawyers	Tiptons	Burnards	Truro Pk
?*Philodina sp*						★			★	★
Brachionus angularis Gosse	★★★	★★★S					★★	★	★	★
Brachionus calyciflorus Pallas	★★					★				
Brachionus dichotomus Shephard										
Brachionus quadridentatus Hermann			★				★		★★	★★★
Euchlanis ?parva Rousselet			★							
Keratella cochlearis (Gosse)							★	★★★	★★★	★
Keratella procurva (Thorpe)	★★★	★	★		★	★	★	★		
Keratella tropica (Apstein)	★★★	★	★			★		★		
Keratella slacki (Berzins)	★		★★		★	★★	★	★		★
Macrochaetus collinsi (Gosse)								★		★

Colurella sp											
Monostyla bulla Gosse											
Cephalodella sp.					★						
Trichocerca birostris (Minkiewicz)	★	★	★								
Trichocerca cacucina (Wierzejski et Zacharias)									★		
Trichocerca similis (Wierzejski)		★			★	★					★
Ascomorpha ?saltans Bartsch					★						
Gastropus hyptopus (Ehrb.)					★★				★		
Gastropus stylifer (Imhof.)					★						
Asplanchna ?brightwelli Gosse	★★	★									
Asplanchna sieboldi (Leydig)					★S			★			
Asplanchna (Asplanchnella) sp.									★	★★★	★
Polyarthra dolichoptera (Idelson)	★	★					★			★	
Polyarthra vulgaris Carlin	★	★★★	★★★			★★	★		★★		
Synchaeta sp.	★						★		★		
Pompholyx sulcata (Hudson)	★★★	★★★	★			★★★	★★★	★			
Testudinella ?amphora Hauer									★	★	★
Filinia longiseta (Ehrb.)							★S			★	
Filinia maior (Colditz)		★	★			★					
Hexarthra mira (Hudson)			★	★★		★S					
Conochilus sp.			★							★	
Conochiloides ?coenobasis (Skor.)		★									
Conochiloides sp.						★	★				

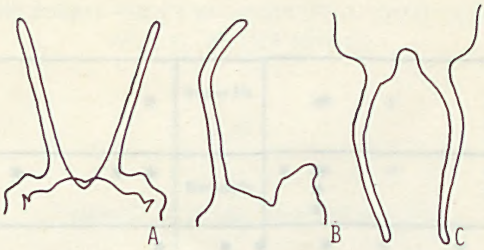

Fig. 1. Brachionus dichotomus Shephard
A,B: Frontal Region (A: Dorsal, B: Lateral),
C: Posterior Region.

Ecological Aspects

(a) *Methods*

In each dam, oblique plankton collections from near the bottom to the surface were taken with a phytoplankton net (mesh aperture of 159 µm). Samples were preserved in 5% formalin.

(b) *Results*

Some 34 taxa of rotifers were recognised in the 10 collections (Table 1). Of the 23 positively identified to species level, all are widely distributed and many are common components of plankton. In these dams the dominant species were *Polyarthra vulgaris, Pompholyx sulcata, Brachionus angularis, Keratella slacki and K. cochlearis.* A number of species, especially among the incompletely identified forms, are more typical of littoral areas, e.g. *Philodina* sp., *Macrochaetus collinsi, Colurella* sp., *Monostyla bulla, Cephalodella* sp., and *Testudinella amphora.*

Momentary species compositon averaged 9.6 per dam, with a range of 7 -12. There was no correlation between any of the physico-chemical parameters measured and species composition.

(c) *Discussion*

This list adds four new records *(Pompholyx sulcata, Filinia maior, Ascomorpha saltans* and *Testudinella amphora)* for Australia and expands the known distribution within Australia for many species (see Shiel and Koste 1979).

The figure of 9.6 for momentary species composition is high (cf 5.5 given by Pennak, 1957) probably because of the presence of a number of littoral strays. Such are often present in the plankton of small farm dams because of the small relative volume of the limnetic zone and its proximity to the bottom and littoral regions.

Taxonomical Notes

(a) *Brachionus dichotomus* Shephard 1911 (see Fig. 1, A, B and C).Shephard described this species in 1911 based on specimens from Black Rock, Victoria. Although Harring (1913, p.21) treated the species as valid, Wiszniewski (1953, p.27) and Voigt (1956-57, p. 157) regarded it as a doubt-

ful species. Ahlstrom (1940, p. 164) considered it was inaccurately described (Shephard was thought to have missed seeing all the occipital spines) and accordingly classified it with some hesitation as a form of *B. falcatus.* In four recent monographs on rotifers (Rudescu, 1960; Kutikova, 1970; Ruttner-Kolisko, 1972; and Koste, 1978) *Brachionus dichotomus* is not described. If, however, Shephard's description is accurate, it is a distinct species.

Speciments of a *Brachionus* species from Burnards and the Truro Park irrigation dams answer the description of *Brachionus dichotomus* given by Shephard. Significantly there are only two occipital spines — neither the anterior-lateral nor the anterior-intermediate spines are present. The spines are quite long and curved ventrally at the tip (Fig. 1, B). The posterior spines are even longer than the anterior ones. As claimed by Shephard (1911, p. 57) there is a 'V-shaped' notch between the bases of the occipital spines. Hence B. *dichotomus* is to be regarded as a valid species. Interestingly, Shiel (personal communication) independently reached the same conclusion for specimens recently collected by him from inland southern Queensland and northern NSW.

Our specimens have the following measurements: body without spines 90-100µm long and 80 µm wide; occipital spines 28-60 µm, posterior spines 30-80 µm. The pectoral margin (Fig. 1,A) is more undulated than in Shephard's animals. Additionally it was noticed that the toe is clawed as in *Schizocera diversicornis.*

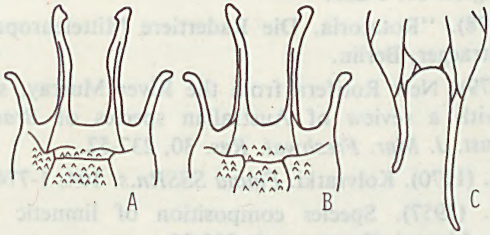

Fig. 2. Keratella valga slacki Berzins
A,B: Anterior Region. C: Posterior Region.

(b) *Keratella slacki* (Berzins, 1963) (see Fig. 2 A,B & C). Specimens from six of the farm dams (see Table 1) were easily identified as *Keratella slacki* (originally placed as a subspecies of *K. valga,* but raised to specific status by Koste, 1979) but differed in two characteristics from Berzin's original descriptions:

(i) The features of the median frontal area. In Berzin's specimens there is a pair of short oblique ribs at the corners of the median frontal area which is elongated lengthwise, but in the Gloucester specimens the median frontal area is much wider and has a pair of horizontal (i.e. transverse to body axis) ribs (Fig. 2A) or no ribs at all (Fig. 2B).

(ii) The shape of the posterio-median plaques. In Berzin's specimens the posterio-median plaque is roundish with the border against the marginal plate especially curved; in the present speciments the posterio-median plaque is hexagonal in shape (Fig. 2C)

Our speciments have the following measurements: body without spines 125-135μm in length, 86-90 μm wide; median spines 45-50μm; anterior lateral spines 28-32 μm; left posterior spines 50-60 μm; right posterior spines 90-100μm.

Acknowledgement

We wish to thank Mr. R. Shiel, University of Adelaide, for his helpful discussion and comments on the manuscript.

References

Ahlstrom, E.H. (1940). A revision of the rotatorian genera, *Brachionus* and *Platyias* with descriptions of one new species and two new varieties. *Bull. Amer. Mus. Nat. Hist.* 77, 148-84.

Bayly, I.A.E. and Williams, W.D. (1973). "Inland Waters and their Ecology". (Longmans: Melbourne)

Berzins, B. (1963). Two new *Keratella,* Rotatoria from Australia. *Hydrobiologia* 21, 380-3.

Harring, H.K. (1913). Synopsis of the Rotatoria. *Bull U.S. Nat. Mus. Washington* 81: 1-226.

Koste, W. (1978). "Rotatoria, Die Radertiere Mitteleuropas." Vols. I and II. Borntraeger, Berlin.

Koste, W. (1979). New Rotifera from the River Murray, south-eastern Australia, with a review of Australian species of *Brachionus* and *Keratella. Aust. J. Mar. Freshwat. Res.* 30, 237-52.

Kutikova, L.A. (1970). Kolvratki. *Fauna SSSRn.s.* 104, 1-774.

Pennak, R.W. (1957). Species composition of limnetic zooplankton communities. *Limnol. Oceanogr.* 2, 222-32.

Rudescu, L.R. (1960). Rotatoria. In *Fauna Republicii Populare Romine. Vol. II. Bucharest: Academia Republicii populare Rominiea:* 1-1192.

Ruttner-Kolisko, A. (1972). Rotatoria. In *Die Binnengewaesser* 26, 99-234.

Shephard, J. (1911). A list of Victorian rotifers with descriptions of two new species and of the males of two species. *Proc. R. Soc. Vic (n.s.)* 24, 46-58.

Shiel, R.J. and Koste, W. (1979). Rotifera recorded from Australia. *Trans. R.Soc. S.Aust.* 103, 57-68.

Timms, B.V. (1968). Comparative species composition of limnetic planktonic crustacean communities in south-east Queensland, Australia. *Hydrobiologia* 31, 474-80.

Timms, B.V. (1970). Chemical and zooplankton studies of lentic habitats in north-eastern New South Wales. *Aust. J. Mar. Freshwat. Res.* 21, 11-33.

Voigt, M. (1956-57). "Rotatoria. Die Radertiere Mitteleuropas", Bd 1 und Bd 2. (Berlin - Nikolassee : Borntrager.)

Wiszniewski, J. (1953). Materiaux rélatifs a la nomenclature et a la bibliographie des Rotiferes. *Polskie. Arch. Hydro.* 15, 7-249.

AN APPRAISAL OF AN AIR-LIFT SAMPLER FOR SAMPLING STREAM MACROINVERTEBRATES

by

R.H. Norris*

Abstract

A modification of the air-lift sampler of Peason *et al.* (1973) is presented. The overall efficiency of collection of animals was similar to that of the Surber sampler although there were some differences in the number of individuals of some species. The air-lift sampler was more efficient than a Surber sampler in the time taken to collect and subsequently sort the samples. The efficiency of the air-lift sampler and its operation may be affected less than that of the Surber sampler by physical factors at the site and time of sampling such as water depth, flow rate, substrate type and water temperature.

Introduction

Efficient quantitative sampling methods are required for general ecological and pollution studies of rivers. Assessment of stream benthic macroinvertebrates presents many problems which may be difficult to overcome using a single sampling method, or even a number of methods.

A study of the benthic macroinvertebrates of a stream usually involves sampling at several sites and at different times of the year. Each site may have differences in substrate, water depth, flow rates and many other factors which could alter the efficiency of a particular sampling method. Factors which change seasonally may also alter the sampling efficiency, for example flow rates may vary seasonally as well as spatially, and cold winter temperatures may affect manual operations.

As well as sampling from a number of sites on a temporal basis, studies of stream benthos often require large numbers of comparable samples so that statistical procedures may be confidently employed (Elliot 1971). It is also desirable that collection and sorting of the samples can be conducted with a minimum of delay and inconvenience.

The Air-lift Sampler

The use and development of air-lift samplers has been reviewed by Verollet and Tachet (1978) and according to these authors they have been in use since 1967. Pearson *et al.* (1973) reported that an air-lift sampler was efficient as a means of collecting stream benthic animals. The sampler described here is a modification of the air-lift sampler described by Pearson *et al.* (1973). The modified air-lift sampler is shown in Figure 1.

* Department of Zoology, University of Tasmania. Present address: National Museum of Victoria, 285-321 Russell Street, Victoria, Melbourne, 3000.

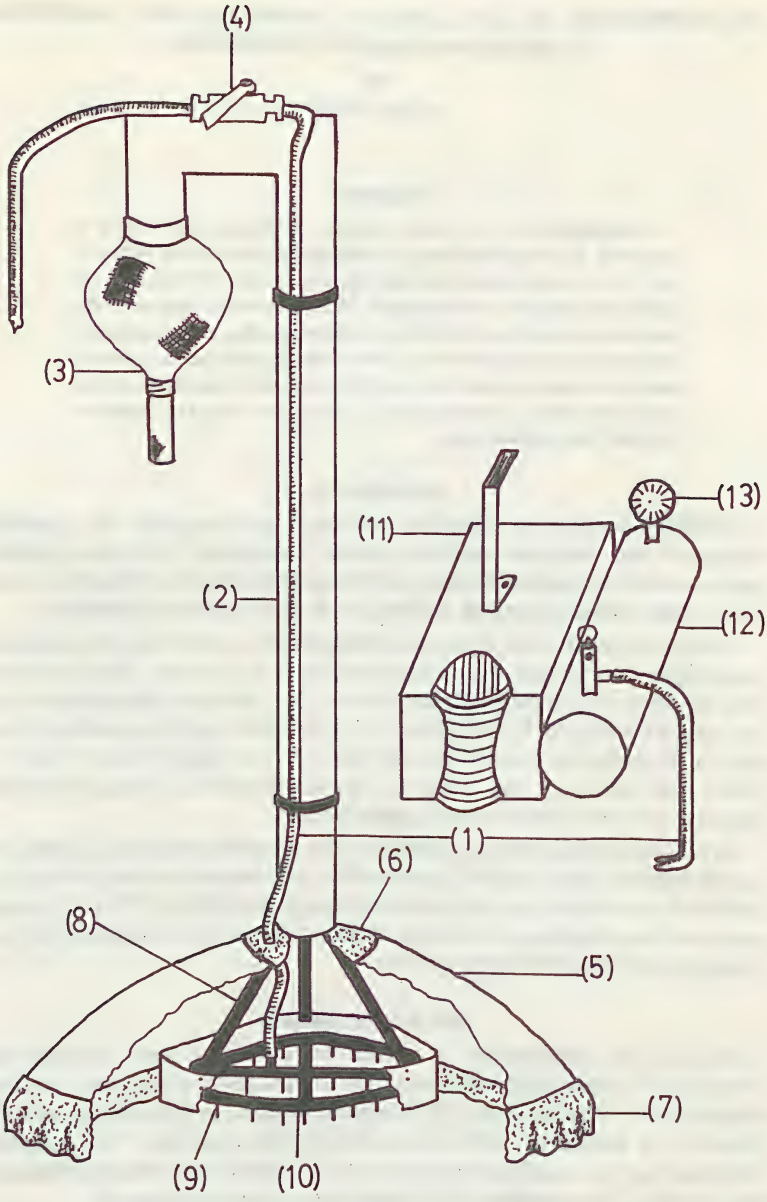

Figure 1. The modified air-lift sampler. (1) air supply hose, (2) delivery pipe, 50 mm, (3) catching net and sample container, (4) air supply stop-cock valve, (5) plastic dome cover, (6) flexible rubber collar, (7) flexible rubber skirt, (8) steel tripod, attaching sampling area to delivery pipe, (9) sampling area, 155 mm diameter plastic pipe, (10) air jets, (11) portable compressor, (12) storage tank, (13) pressure gauge.

The essential features common to the modified air-lift sampler and that of Pearson *et al.* (1973) are the sample area (9 in Fig. 1), air jets (10 in Fig. 1), delivery pipe (2 in Fig. 1) and the catching net (3 in Fig. 1). The modifications to the air-lift sampler are listed and described below:

i) the addition of a lightweight compressor capable of delivering $0.115 m^3$ of air per minute to a storage tank (see 11 in Fig. 1). The compressor is easily carried by one person and removes the restriction of a limited air supply imposed by the use of air bottles.

ii) The addition of a pressure gauge on the storage tank (see 13 in Fig. 1) enables the delivery air pressure to be reliably set at a selected pressure (in this case 550 KPa)

iii) The addition of the stop-cock valve on the air delivery hose (4 in Fig. 1) enables almost instantaneous delivery of air at the standardized pressure.

iv) The plastic dome cover in conjunction with the tripod connecting the delivery pipe to the actual sampling area (5 and 8 in Fig. 1) ensures that any air which escapes outside the sampling area is collected and passed to the delivery pipe. The flexible rubber collar and skirt (6 and 7 in Fig. 1) ensure that the sampling area and the plastic dome are both able to make a tight seal with the substrate. These modifications virtually eliminate the problem of air loss around the rim of the sampling area and enables the use of the air-lift on quite uneven substrates.

v) The delivery pipe doubles as a handle to hold the sampler on the bottom (2 in Fig. 1).

vi) A sample bottle of the desired size is attached to the catching net (3 in Fig. 1) so that when sampling is completed the collected material may be washed from the net to the bottle which is then detached and replaced with a new bottle. This eliminates the often time-consuming task of transferring samples from catching nets to storage containers.

Mode of Operation and Assessment of the Air-lift Sampler

The modified air-lift sampler (Fig. 1) was operated in essentially the same manner as described by Pearson *et al.* (1973). The sampler is placed gently on the bottom and held firmly in a vertical position. The stop-cock valve is then used to provide 3 air blasts each of 10 seconds duration.

The modified air-lift sampler was compared with a Surber sampler as part of an ecological study of the South Esk River in northeast Tasmania. The Surber sampler has been described by several authors including Hynes (1972) who also stated that this method is one of the most commonly used devices for sampling stream benthos.

The modified air-lift sampler (Fig. 1) and a Surber sampler of equal area ($200 cm^2$) and with a catching net with the same pore size (967 μm) were both used to collect 30 samples from each of two sites in the South Esk River. The flow rate at each site was approximately $0.6 m s^{-1}$ flowing over a cobble bottom (average rock diameter 8 cm).

The samples were preserved in the field in 10% formalin with 100 mg/1 Rose Bengal stain to later facilitate sorting. This method of staining has been described by Mason and Yevich (1967). The samples were subsequently sorted in the laboratory using a stereomicroscope.

Results

The time taken to collect 30 samples using the air-lift sampler was 30 to 45 minutes while it took 2 to 3 hours using the Surber Sampler to collect the same number of samples. The sampling for this comparison was conducted in early autumn and the time difference between these methods may have been even greater in winter when colder water temperatures may inhibit manual operations.

It took approximately 24 hours to separate animals from each set of 30 air-lift samples while approximately 32 hours sorting was required to perform this task for the Surber samples.

The taxa and the number of individuals collected using the modified air-lift sampler and the Surber sampler are presented in Table 1. The total number of animals and the number of taxa collected using the two methods were compared using a two sample t - test after a log (x + 1) transformation of the data. There were no significant differences between the total number of animals collected ($t = 0.63$) nor were there any significant differences between the number of species collected by each sampler ($t = 0.30$).

The numbers of individual species collected by each sampling method were also tested for significant differences using two-sample t - tests again after a log (x + 1) transformation has been applied to the data. Table 1 shows the t values and the levels of significance. Species which were represented by less than 50 individuals when the numbers collected in all samples by both methods were summed, were not tested in this way.

The air-lift sampler collected significantly more of the caddis flies *Oecetis sp.* and *Asmicridea sp.* and of the beetle *Austrolimnius sp.* than did the Surber sampler (Table 1). The Surber sampler collected significantly more *Atalophlebioides sp. 1* (Table 1).

Table 1

The taxa and number of individuals collected using the modified air-lift (a-1) sampler and a Surber (S) sampler on a cobble substrate in the South Esk River in April 1976. Both methods have been compared and also presented here are the t values and levels of significance (sig.) for taxa with more than 50 individuals collected by both methods.

Taxa	a-1	S	t	sig.
TURBELLARIA				
Cura pinguis	3	8		
ANNELIDA				
Megadrilus sp.	1			
Telmatodrilus multiprostatus	1			
GASTROPODA				
Angrobia angasi	709	684	0.99	N.S.
Ferissia petterdi	2	1		
BIVALVIA				
Sphaerium tasmanicum	2	1		
CRUSTACEA				
Austrochiltonia australis	1	4		
INSECTA: EPHEMEROPTERA				
Baetis baddamsae	106	74	1.87	N.S.
Tasmanocoenis sp.	1			
Atalophlebia australis	1			
Atalophlebia (nr.) longicaudata	6	10		
Atalophlebioides sp. 1	44	188	7.33	***
Atalophlebioides sp. 2	23	20		
Atalonella sp.	54	69	0.67	N.S.
COLEOPTERA				
Austrolimnius sp.	106	51	2.42	*
Stetholus sp.	1			
Helodidae *sp.*	8	36		
DIPTERA				
Austrosimulium sp.	11	10		
Orthcladiinae *sp.*	10	18		
Cricotopus albitibia		1		
Ablabesymyia notablis		2		
Muscidae *sp. 1*	2	3		
Muscidae *sp. 2*	1	1		
TRICHOPTERA				
Helicopsyche murrumba	15	28		
Taschorema ferulum	8	7		
Apsilochorema sp.	2	6		
Oecetis sp.	226	105	2.14	*
Ecnomus sp.	2	2		
Agapetus sp.	150	120	0.18	N.S.
Asmicridea sp.	142	33	3.89	***
Hydroptilidae sp.	3	5		
Conoesucidae sp. 1	7	9		
Conoesucidae sp. 2	3	3		
Conoesucidae sp. 3	32	43	0.00	N.S.
Conoesucidae sp. 4	23	13		
Anisocentropus latifiascia	1			
Tasimiidae sp. 1	9	5		
Tasimiidae sp. 2	6	3		
TOTAL number of individuals	1720	1565		
TOTAL number of taxa	36	33		

N.S., not significant P 0.05
* significant P 0.05
*** very highly significant P 0.001

Discussion

The similarity between the air-lift and Surber samplers in the number of individuals and the number of taxa collected shows their overall sampling efficiency to be similar. Pearson *et al.* (1973) also reached this conclusion when their air-lift sampler and a Surber sampler were compared.

The reason(s) why the caddis flies *Oecetis sp.* and *Asmicridea sp.* and the beetle *Austrolimnius sp.* were collected in larger numbers by the air-lift sampler than by the Surber sampler are unclear. *Asmicridea sp.* is a net spinning caddisfly which attached itself quite securely to the substrate and it is significant that the air-lift sampler was able to remove large numbers of these animals. If the rocks had been carefully cleaned with a brush when using the Surber sampler it is possible larger numbers of these three species would have been collected. However, such a practice would certainly have added considerably to the sampling time.

The higher numbers of the mayfly *Atalophlebioides sp.* 1 collected using the Surber sampler may be attributed to their living, or retreating, under rocks. Animals of this species would be more likely to be dislodged when the rocks were picked up and washed than they would be by the turbulence created by the air-lift sampler. However, it is important to note that differences of a similar type were not recorded for other closely related mayfly species (Table 1).

Sound studies of stream macroinvertebrates require large numbers of quantitative samples which must be comparable between sites and between sampling times. The time required for collection of samples using the air-lift sampler was much less than that required for the Surber sampler. A similar time difference was found for sorting the animals from the samples, as the air-lift method sorts in a preliminary way much of the unwanted material.

The modifications of the air-lift sampler presented here were specifically designed to enhance the advantages in the time taken for collection and sorting of samples. The major modification is the dome cover (5 in Fig. 1) which almost completely eliminates the need to reject a sample due to loss of air around the rim of the sampling area as discussed by Pearson *et al.* (1973). When large numbers of samples are required, this time saving is a very important consideration for the conduct of a study of stream benthic macroinvertebrates for two reasons. First, more samples may be taken with the air-lift sampler in a given time, allowing a better base for statistical examination of the data. Second, labour costs are often limiting factors for ecological studies of a stream and these may be reduced.

The efficiency of the Surber method is affected by factors such as flow rate, differences between individual users and cold water temperatures which may hinder manual operations. Needham and Usinger (1956) have discussed several of the factors affecting the efficiency of the Surber sampler. Such factors, which affect the efficiency of the Surber sampler, mean that samples collected using the Surber method may not be comparable between different sites or different times of the year.

The air-lift sampler does not rely on flow rate to collect the benthic animals, the operator's hands are not immersed in water and, as shown by Pearson *et al.* (1973), the air-lift sampler will function efficiently over a range of water depths and substrate types. The air-lift sampler therefore overcomes many of the shortcomings of the Surber sampler.

Acknowledgments

I am grateful to Dr P.S. Lake for his criticism of this manuscript. This work was supported by the Department of Zoology, University of Tasmania.

References

Elliot, J.M. (1971). "Some Methods for the Statistical Analysis of Samples of Benthic Invertebrates" Freshwater Biological Association, Scientific Publication No. 25.

Hynes, H.B.N. (1972). "The Ecology of Running Waters" (Liverpool University Press.)

Mason, W.T. and Yevich, P.O. (1967). The use of phloxine B and rose bengal stains to facilitate sorting benthic samples. *Trans. Amer. Micros. Soc. 86, 221-3.*

Needham, P.R. and Usinger, R.L. (1956). Variability in the macro-fauna of a single riffle in Prosser Creek, California, as indicated by the Surber Sampler. *Hilgardia 24, 383-405.*

Pearson, R.G., Litterick, M. R. and Jones, N.V. (1973). An air-lift for quantitative sampling of the benthos. *Freshwat. Biol. 3, 309-15.*

Verollet, G. and Tachet, H. (1978). Suction sampler for sampling benthic macroinvertebrates in large rivers. *Arch. fur Hydrobiol. 84, 55-64.*

THE ROLE OF TROUT AS SPORT FISH IN IMPOUNDED WATERS OF VICTORIA AND NEW SOUTH WALES*

by

P.L. Cadwallader† and R.D.J. Tilzey‡

Abstract

The use, desirability and effectiveness of trout as sport fish in man-made lakes in Victoria and N.S.W. are examined. Impoundments are classified as perennial and marginal trout waters and non-trout waters, and the numbers of trout liberated and the efficiency of stocking policies are discussed. It is suggested that an appraisal of the economics of Australian trout-stocking practices is needed to determine the efficiency and effectiveness of such policies. There is also a need to consider the merits of sport fish other than trout when formulating stocking policies for marginal trout waters. Native golden perch, silver perch, Murray cod, trout cod, Macquarie perch and river blackfish all have potential as alternative sport fish in such impoundments.

Introduction

Fishing is undoubtedly an important outdoor recreational activity in Australia. The results of a survey commissioned by N.S.W. State Fisheries and conducted by McNair Anderson Associates in May 1977 showed that 30% of New South Wales residents aged 13 and over go fishing at least once a year (J.G. Pepperell, N.S.W. State Fisheries, personal communication). Similarly, the results of a recent public opinion poll in Victoria indicated that about one million (36%) of the State's population go fishing at least once a year (Beinssen 1978). The continuing creation of inland impoundments has resulted in lentic freshwater fisheries playing an increasingly important recreational role. For example, the results of a creel survey at Lake

* Paper presented at Symposium on "Dammed Waters" held during the 18th Annual Conference of the Australian Society for Limnology at Tallangatta 19-20 May 1979.

† Fisheries and Wildlife Division, Ministry for Conservation, Snobs Creek Freshwater Fisheries Research Station and Hatchery, Private Bag 20, Alexandra, Vic. 3714.

‡ New South Wales State Fisheries, P.O. Box N211, Grosvenor Street, Sydney, N.S.W. 2000.

Eucumbene, N.S.W., showed that 579,000 man-hours were spent fishing during the 1970-71 season (Tilzey, unpublished data). A survey of inland angling by Collins (1976) revealed that 66% of the freshwater fishing effort in N.S.W. was directed towards introduced trout, 7% towards Australian bass *Macquaria novemaculeata,* and 27% towards native warmwater species such as Murray cod *Maccullochella peeli,* golden perch *Macquaria ambigua* and catfish *Tandanus tandanus.* It is therefore hardly surprising that south-east Australian fish propagation and stocking practices have, until recently, centred solely upon trout. Each year brown trout *Salmo trutta,* rainbow trout *Salmo gairdneri* and brook trout *Salvelinus fontinalis* are released in the waters of mainland south-eastern Australia by the fisheries agencies of N.S.W. and Victoria (brook trout stocked by N.S.W. State Fisheries only). The waters stocked include rivers and streams, natural lakes and man-made lakes. In this paper we examine the use, desirability and effectiveness of trout as sport fish in man-made lakes in Victoria and N.S.W.

Classification of Reservoirs

When discussing trout in man-made lakes it is convenient to separate such waters (Fig.1) into three arbitrary groups:

1. Perennial trout waters: those in which surface water temperatures do not exceed 22°C and hypolimnetic dissolved oxygen (D.O.) concentrations remain above 4mg/1.

2. Marginal trout waters: those in which surface temperatures greater than 22°C or hypolimnetic D.O. concentrations below 4 mg/1, or both, restrict trout distribution for part of the year.

3. Non-trout waters: those in which water temperatures exceeding 25-26°C or D.O. concentrations below 3 mg/1, or both, preclude the survival of trout in any part of the water column.

Waters in Group 1 comprise lakes occurring along the eastern ranges, usually above 900 m altitude. Their comparatively narrow seasonal physicochemical regimes are often similar to those of the trout's ancestral (i.e. European and North American) lentic habitats and trout are often the only sport fish found therein. Waters of Group 2 comprise tableland lakes at altitudes of 400-900 m, and others at lower altitudes, particularly in Victoria. Such lakes encompass a wide seasonal range of physicochemical

Fig.1 Major Victorian (excluding Dartmouth Dam) and N.S.W. impoundments excluding those of the western plains).

regimes, some of which often differ markedly from the optima for trout survival (Weatherley and Lake 1967, Tilzey 1977), and result in periodic trout kills. Sport fish other than trout are often present. Waters of Group 3 comprise lakes at low altitude on the eastern seaboard, the western plains of N.S.W. and the Mallee region of Victoria. Such lakes, where trout will not survive, are not discussed further in this paper.

It is worth mentioning here that although the construction of inland impoundments has in many cases increased the number of suitable trout habitats, it has also markedly depleted native fish stocks by altering the flow and temperature regimes of many rivers (Cadwallader 1978).

Stocking with Trout

Stocking is what started the Australian trout fisheries and stocking is the procedure revered by most trout fishermen. What the majority of anglers wants, it usually gets. Stocking is therefore still the backbone of Australian trout management policy. The numbers and proportions of overall production of brown and rainbow trout released in rivers and streams, natural lakes and man-made lakes in Victoria between 1972 and 1978 are presented in Table 1. In 1978 almost 62% of rainbow trout and almost 37% of brown trout produced at the State fish hatchery were released in man-made lakes. The trend in trout management in recent years has been towards the production of fewer and larger fish, and in Victoria most trout liberated during 1978 were 150 mm in length or longer. The numbers of each type of water stocked in Victoria between 1972 and 1978 are given in Table 2, which shows that during recent years brown and rainbow trout have each been stocked consistently in more than 30 man-made lakes per year. Most of these man-made lakes are dammed rivers but a few, such as the Bambra Coal Mine Lake (Winchelsea), have been formed by the flooding of old mine workings.

Of the 26 major State Rivers and Water Supply Commission reservoirs in Victoria most have been stocked with trout during the last 20 years (Table 3). Lake Eildon has been stocked with the most fish; more than 1 330 000 rainbow trout and about 300 000 brown trout have been released since 1958. However, these figures include about 82 000 rainbow trout fry and about 230 000 brown trout fry whose survival must have been negligible (see below). During the same period, Lake Eppalock was stocked with about 400 000 brown trout, including about 100 000 fry, and more than 420 000 rainbow trout, and Rocklands Reservoir was stocked with about 200 000 brown trout and about 690 000 rainbow trout. These figures are for fish released directly into the reservoirs and do not include fish released into rivers and streams flowing into the reservoirs. The trout fisheries in these reservoirs followed the normal pattern of high growth and catch rates in the early years of impoundment and a subsequent decline to a more or less stable situation in which fishing is relatively poor (Butcher 1967).

Table 1. Approximate numbers of brown and rainbow trout released in various types of water in Victoria during the period 1972-78, with the proportion (%) of fish released in each type of water in parenthesis. Compiled from Fisheries and Wildlife Division records.

	Total production x 10^3	Numbers (x 10^3) and percentages of total annual production of fish released in:					
		Rivers and streams		Natural lakes		Man-made lakes	
A. Brown trout							
1972	1053	324	(30.8)	83	(7.9)	646*	(61.3)
1973	646	277	(42.9)	70	(10.8)	299	(46.3)
1974	661	448	(67.8)	58	(8.8)	155	(23.4)
1975	408	145	(35.5)	25	(6.1)	238	(58.3)
1976	431	161	(37.4)	40	(9.3)	230	(53.4)
1977	321	143	(44.5)	48	(15.0)	130	(40.5)
1978**	459	240	(52.3)	51	(11.1)	168*	(36.6)
B. Rainbow trout							
1972	723	21	(2.9)	425	(58.8)	277*	(38.3)
1973	629	17	(2.7)	343	(54.5)	269	(42.8)
1974	568	36	(6.3)	253	(44.5)	279	(49.1)
1975	498	48	(9.6)	232	(46.6)	218	(43.8)
1976	547	8	(1.5)	335	(61.2)	204	(37.3)
1977	504	7	(1.4)	179	(35.5)	318*	(63.1)
1978**	335	31	(9.3)	97	(29.0)	207*	(61.8)

* These figures include fry.

** In addition, in 1978 more than 120,000 eggs forwarded to the Bright Acclimatisation Society produced about 95,000 brown trout and 25,000 rainbow trout which were released as fry into tributaries of the Ovens River (A.F. Baxter, Fisheries and Wildlife Division, personal communication). Eggs are also sent to other Acclimatisation Societies and angling club hatcheries and are even placed directly into some waters, e.g. rivers flowing into Lake Eildon!

Table 2. Numbers of rivers and streams (RS), natural lakes (NL) and man-made lakes (MM) in Victoria stocked with brown and rainbow trout during the period 1972-78. Compiled from Fisheries and Wildlife Division records.

	Numbers of waters stocked					
	Brown trout			Rainbow trout		
	RS	NL	MM	RS	NL	MM
1972	48	10	29	4	13	29
1973	44	10	29	3	10	35
1974	42	7	24	4	9	37
1975	32	6	36	4	9	36
1976	33	7	35	3	9	38
1977	39	9	37	3	7	38
1978	54	9	33	13	9	31

Table 3. Major Rivers and Water Supply Commission reservoirs in Victoria, their main purposes, occurrence of brown (BT) and rainbow trout (RT) liberations between 1958 and 1978, and other fish species present. Other species include all species taken in the waters except small native species (which would not have been taken by the collecting methods used) and *Carassius* spp. (omitted because of confusion in the identification of crucian carp and wild goldfish).

Reservoir (see Fig. 1)	Purposes[a]	Trout stocked[b]	Other fish present[c]
1. Bellfield, Lake	TWS	RT	BF,EP
2. Buffalo, Lake	I	BT, RT	EP, MC, MP
3. Cairn Curran Reservoir	H, I	BT, RT	EP, TE
4. Devilbend Reservoir*	TWS	Nil	No data
5. Eildon, Lake	H, I, TWS	BT, RT	BF,EP,MC,MP,RO,TE
6. Eppalock, Lake	I, TWS	BT, RT	EC, EP, TE
7. Fyans, Lake	TWS	BT, RT	EC, TE
8. Glenmaggie, Lake	I	BT, RT	EC, EE
9. Goulburn Weir	I, TWS	Nil	BB,CA,EP,GP,MC,SP,TE
10. Hume, Lake	H, I, TWS	RT	EP, MC, MP
11. Lauriston Reservoir	I, TWS	BT, RT	EP
13. Melton Reservoir	I	BT	EE, EP, RO, TE
14. Merrimu, Lake*	I, TWS	BT	No data
15. Mokoan, Lake	I	Nil	EP, MC
16. Nillahcootie, Lake	I	BT, RT	BF, EP, MP
17. Pykes Creek Reservoir	I	BT, RT	EE, EP
18. Rocklands Reservoir	TWS	BT, RT	BF, EP, TE
19. Rosslyne Reservoir*	TWS	Nil	No data
20. Tarago Reservoir*	TWS	RT	BF
21. Torrumbarry Weir	I	Nil	No recent data
22. Tullaroop Reservoir	I, TWS	BT, RT	EP, TE
23. Upper Coliban Reservoir	I, TWS	BT, RT	EP
24. Waranga Reservoir	I	Nil**	EP,GP,MC,TE
25. Wartook, Lake	TWS	BT, RT	BF, EP, TE
26. William Hovell, Lake	I	Nil	BF,EP

a, based on Australian Water Resources Council (1976) and Tanner (1977); b, data from Fisheries and Wildlife Division records; c, based mainly on Tunbridge and Rogan (1976).
Key to purposes: H, hydro-electric; I, irrigation; TWS, town water supply.
Key to fishes: BB, bony bream; BF, river blackfish; CA, catfish; EC, European carp; EE, eels; EP, European perch; GP, golden perch; MC, Murray cod; MP, Macquaire perch; RO, roach; SP, silver perch; TE, tench.
*Fishing prohibited. **Not stocked directly, but contains brown and rainbow trout.

In N.S.W. during the period 1971-77 a total of 2 725 000 rainbow trout, 3 323 000 brook trout and 99 500 Atlantic salmon *Salmo salar,* were released from the two N.S.W. State Fisheries trout hatcheries. Since 1965, brown trout have not been produced at either hatchery because most perennial trout waters in N.S.W. contain self-propagating populations of brown trout and some waters, such as Lake Eucumbene (Tilzey 1972), are overpopulated with this species. However, continued pressure from angling groups has recently resulted in limited numbers again being released "on an experimental basis". Recently (1978) N.S.W. State Fisheries has shifted the emphasis from rearing brook trout, which have had limited success in most established trout habitats, to producing larger numbers of rainbow trout and Atlantic salmon. Although the precise numbers released in the various types of water are unavailable for N.S.W., most of the trout and all of the salmon were liberated into man-made lakes or their catchments. Nearly all trout were released as fingerlings.

The 19th century attitude of liberating trout almost everwhere and anywhere they might have survived has not changed significantly during recent years. Consequently, the policy that the State fisheries agencies of New South Wales and Victoria now have of stocking trout only into waters in which they have previously been liberated means little when it is realised that most suitable waters have had trout liberated into them at some time in the past. In South Australia, the Department of Fisheries is not involved in trout liberations which are, instead, handled by the South Australian Fly Fishers' Association. Although private dams are stocked with trout, government reservoirs are not stocked because present policy does not allow access for fishing. However, many streams are stocked with trout on the basis that "if a section of water will hold trout for 4 out of 5 years we consider it worth stocking"!

Justification for trout liberations is based on "giving the angler what he wants" and, indeed, this attitude appears to be justified by the amount of pressure for trout releases exerted by certain angling organisations. However, as pointed out by Lake (1978), many native species provide just as good sport as trout on light gear and taste much better. He goes on to say that the overrated qualities of trout "go back to the time when trout fishing was mainly confined to the rich, and some sort of snob appeal still lingers. Ignorance of the native fishes was, and still is to some extent, another reason for the attitude towards trout".

Stocking Efficiency

In 1977 the price of trout produced at commercial fish farms in Victoria was 9-11 cents each for fry, 13-17 cents each for fingerlings, 19-35 cents each for yearlings and 42-75 cents each for two-year-old fish (Anon 1977a). At the Victorian State fish hatchery at Snobs Creek the "average cost" of an individual trout by the time it is eventually liberated is about 33 cents (C. Barnham and D. Buckmaster, Fisheries and Wildlife Division, personal com-

munication). This figure is based on running costs of the hatchery, staff salaries, maintenance of trout-liberation trucks, etc. Thus, it can be seen from the numbers of fish liberated annually (Table 1) that a great deal of money is involved in the stocking of man-made lakes and other waters to maintain Victorian trout fisheries.

Likewise, much money is used for stocking the waters of N.S.W. with trout. For example, expenditure associated with the operations of the two N.S.W. State Fisheries trout hatcheries totalled $190 837 for the 1977-78 financial year (938 000 fish released at about 20.3 cents each).

Whereas there is no doubt at all that stocking is essential to the continuation of trout fisheries in which the fish for one reason or another cannot breed, there is also little doubt that most of the effort in stocking fish in established trout waters is wasted. Nicholls (1958) after studying the effectiveness of stocking a Tasmanian stream concluded that less than 2% of hatchery-reared fish reached the angler. Lake (1957) arrived at essentially the same conclusion for New South Wales trout waters. More recent quantitative studies are lacking, but there is no reason to suppose that today's stockings of lotic trout waters are any more successful. The situation in Australian lentic waters is even less clear since no quantitative studies aimed at determining the proportion of released fish reaching the angler have been conducted in such habitats. Tilzey (in press) found that in Lake Eucumbene the annual angling harvest for "wild" trout aged three years and older was 11.1-12.3% for brown trout and exceeded 22.0% for rainbow trout. He also (unpublished data) found that total mortality in the first year of life exceeded 98% for both species. The proportion of releases of under-yearling trout reaching the angler in Lake Eucumbene or in similar habitats would thus almost certainly be extremely low. However, liberations of brook trout and Atlantic salmon (aged 0+ to 3+) in nearby Lake Jindabyne, a water also containing wild populations of brown and rainbow trout, have resulted in the first two species forming a large part of the anglers' catch. Release/percentage-recapture studies are clearly needed to determine stocking success in such lentic waters.

American studies, such as that of Rawstrom (1973), have shown that even when trout are released at a legally takeable size and the harvest in most cases exceeds 40%, the cost of each fish caught is about U.S. $1.00. The cost of each hatchery-reared trout which reaches the Australian angler is certainly much higher considering the extremely low harvest rates. An economic appraisal of Australian trout stocking practices is needed to determine the efficiency and effectiveness of such policies.

The above comments relate to Group 1 waters only, i.e. those in which physicochemical conditions favour survival of trout. An even smaller proportion of released trout would probably reach anglers fishing in Group 2 waters since the physicochemical stresses of high surface water temperatures and low D.O. concentrations typically occurring in summer months would either result in high trout mortalities or confine trout to the metalimnetic zone where they are much less accessible to anglers.

Biological factors also markedly influence the success of stocking. In Group 1 waters the number of trout is a major factor since high population densities typically result in poor growth and survival. Numerous researchers, e.g. Neave (1953) and Fraser (1969), have shown that the survival of salmonid juveniles decreases markedly with increasing population density. Similarly, the comparative failure of the recently introduced brook trout to establish self-propagating populations in N.S.W. waters, despite the large numbers released, is probably attributable to competition from the well-established brown and rainbow trout. Other factors also influence the survival of trout, particularly in Group 2 waters. The survival of trout released in some Victorian reservoirs, e.g. Tullaroop Reservoir (Hume 1979), appears to be minimal, and it may be significant that at least 20 of the 26 major S.R.W.S.C. reservoirs in Victoria contain European perch, *Perca fluviatilis* (Table 3). Moy (1974) reported an interesting experiment performed to check the hypothesis that predation by European perch on newly released trout accounts for the poor trout fishing in some reservoirs. The study was carried out in Barkers Creek Reservoir, a deep water with a surface area of 58 ha. The reservoir has a large population of European perch and was stocked regularly with trout. In the experiment, two areas of the reservoir were selected as release sites for trout and both these areas and the remainder of the reservoir were gill-netted to determine the density and distribution of European perch. About 3000 brown trout (mean length 75mm) were then released at the two sites, and a further 300 trout were held in cages (to protect them from predation) in the reservoir for five days. The reservoir was gill-netted for several days after release of the trout. The newly hatched fish were not taken by the nets, but European perch were taken and their stomach contents examined. There was no significant mortality among the 300 trout held in the cages, indicating that physicochemical conditions at the time were suitable for trout survival. However, there was a marked increase in the density of European perch in each release area after the trout were liberated and 90% of the perch taken in these areas, with food in their stomachs, had been feeding on newly released trout! The experiment was repeated three months later with several thousand trout whose mean length (200 mm) was about three times that of the trout in the earlier experiment. No trout were found in the stomachs of the perch netted during this second experiment. The results of these experiments indicate the futility of liberating small trout into reservoirs containing European perch. Small trout, particularly fry, merely provide an expensive source of food for another introduced predatory fish. It is of interest that a recent creel census indicated that European perch was the target species of most anglers who fished Lake Burrumbeet (a natural water), although the lake has been stocked regularly with rainbow trout (D.J. Hume, Fisheries and Wildlife Division, personal communication).

European perch also pose problems in several N.S.W. impoundments, notably Blowering and Talbingo Reservoirs on the Tumut River and Lake Hume on the Murray River. All are large impoundments and are prohibitively expensive to stock with yearling trout (i.e. 200 mm long). Con-

sequently, little stocking of these waters has been carried out and all are relatively poor fisheries containing few fish of catchable size. (European perch inevitably overpopulate, resulting in greatly reduced growth rates and small mean fish size.) There certainly appears to be a need to consider the merits of sport fish other than trout when formulating stocking policies for such waters.

Native Fish Stocking

Until recently there have been no concerted efforts to breed and raise native fishes of recreational importance with a view to producing sufficient numbers for stocking. Butcher (1967) indicated that only residual populations of native fish are to be found in the impounded waters of south-eastern Australia, but whereas trout have been released regularly in many of these waters there have never been, until very recently, corresponding releases of native fish. Golden perch, silver perch *Bidyanus bidyanus,* catfish and Murray cod are now being bred at the N.S.W. State Fisheries Inland Research Station at Narrandera (Anon. 1977b, Shearer in press), and at the Victorian Fisheries and Wildlife Division's Murray cod pilot project at Lake Charlegrark techniques are also being developed for the breeding and raising of Murray cod (Cadwallader *et al.* 1979). During the period 1977-79 large numbers of golden perch and silver perch were released in certain N.S.W. impoundments (Table 4), some of which, such as Burrendong,

Table 4. Impoundments in New South Wales stocked with native fish during the period January 1977-March 1979.

Impoundment	Locality (see Fig. 1)	Species stocked	Number of fish released $x10^3$
Burrendong Dam	38	GP	180
		SP	55
Burrinjuck Dam	33	GP	35
Copeton Dam	41	GP	200
Gillenbah Lagoon* (Narrandera)	-	GP	148
Glenbawn Dam	39	GP	127
		SP	68
Lake Albert*	32	GP	25
Lake Wyangan* (Griffith)	-	GP	13
		SP	13
Wyangala Dam	35	GP	106

*Natural lakes raised for irrigation purposes; GP, golden perch; SP, silver perch.

Burrinjuck and Wyangala, also contain trout. Techniques aimed at producing stockable numbers of Australian bass are also being developed by N.S.W. State Fisheries. This popular sport fish is catadromous and has been particularly adversely affected by the building of dams on coastal rivers (Bishop and Bell 1978).

However, the native species described above are not coldwater fish and although some, such as silver perch and Murray cod, can withstand periods of very low temperature, their growth rates in coldwater habitats are usually slow. Virtually nothing is known about the survival rates of native fishes in any warmwater or coldwater impoundment. Release of such species in Group 1 waters would be inappropriate and may be of little value in the coldest waters of Group 2. However, their release in the warmer waters of Group 2 may result in the development of flourishing fisheries. A good example of a thriving mixed-species fishery in a Group 2 water is that in Burrinjuck Dam, N.S.W., where self-propagating populations of Murray cod, silver perch, brown trout and rainbow trout provide much sport. Stockings of golden perch in this water have also proved successful.

Another two native species, Macquarie perch *Macquaria australasica* and trout cod *Maccullochella macquariensis,* have particularly good potential as fish for stocking the cold waters of Group 2. Ironically, both these species are now considered to be threatened with extinction (Lake 1978). Macquarie perch and trout cod have been known to thrive in man-made lakes. For example, after Lake Eildon was formed in 1927 the Macquarie perch fishery was apparently quite prolific and existed alongside a flourishing trout fishery until after construction of the second, larger wall in 1951. However, since the late 1960's Macquarie perch have virtually disappeared from the lake (Cadwallader and Rogan 1977). In about 1929 trout cod from the Ovens River were introduced into Lake Sambell (Beechworth, Victoria), a small (6 ha surface area) lake formed by the flooding of old mine workings, and maintained themselves in the lake until an unexplained fish kill in 1970. To date, the knowledge or, indeed, the incentive required to breed and raise large numbers of Macquarie perch and trout cod has not been available, but the Victorian Fisheries and Wildlife Division now has projects under way to develop techniques for breeding and rearing both species with the view to ultimately restocking them in suitable waters within their former range. The development of reservoir fisheries for these species, either by the establishment of spawning populations or on the basis of a put-and-take operation, can now be considered as a viable alternative to trout fisheries in Group 2 waters. If only part of the finance, time and effort that have been channelled into breeding trout in the past had been channelled into the study and production of native fishes then perhaps species such as Macquarie perch and trout cod would not now be considered endangered.

Angling satisfaction is composed of a myriad facets. The river blackfish *Gadopis marmoratus,* another of the few native coldwater angling species, is not renowned for its fighting qualities, but nevertheless it could constitute a popular impoundment fish. The following verse by C.J. Dennis must surely reflect the sentiments of many anglers:

"True no great gamefish matching
and yet a goodly string
A meal well worth the catching,
a breakfast for a king!
By sea or stream no fish is sought
sweeter than blackfish freshly caught
I plead for native fishes
whose stocks are running out
For sweet and toothsome dishes
I loathe the taste of trout."

Acknowledgments

We thank Mr M. Harvey who compiled the trout liberation data for Tables 1, 2 and 3. Although they may not necessarily agree with the points of view expressed in the paper, we are grateful to Mr A. F. Baxter, Dr D.D. Evans and Mr P.L. Rogan (Fisheries and Wildlife Division, Victoria) for their comments on the manuscript.

References

Anon. (1977a). Fish in farm dams. *Victoria, Fish. Wild. Div., Fish. Wildl. Inf. Publ.* 5, 9 pp.

Anon. (1977b). Breakthrough in warm-water fish rearing. *Aust. Fish.* 36(7), 16-7.

Australian Water Resources Council (1976). "Review of Australia's Water Resources 1975" Dept. Nat. Res., Canberra, 170 pp.

Beinssen, K.H.H. (1978). Recreational and commercial estuarine fishing in Victoria: a preliminary study. *Victoria, Fish. Wildl. Div., Fish. Wildl. Pap.* 16, 40 pp.

Bishop, K.A. and Bell, J.D. (1978). Observations on the fish fauna below Tallowa Dam (Shoalhaven River, N.S.W.) during river flow stoppages. *Aust. J. Mar. Freshwater Res.* 29, 543-9.

Butcher, A.D. (1967). A changing aquatic fauna in a changing environment. *I.U.C.N. Publs., New Series,* 9, 197-218.

Cadwallader, P.L. (1978). Some causes of the decline in range and abundance of native fish in the Murray-Darling River System. *Proc. R. Soc. Vic.* 90, 211-24.

Cadwallader, P.L., Backhouse, G.N., Gooley, G.J., and Turner, J.A. (1979). New Techniques for breeding and raising Murray cod. *Aust. Fish.* 38, 9-16.

Cadwallader, P.L., and Rogan, P.L. (1977). The Macquarie perch, *Macquaria australasica* (Pisces : Percichthyidae), of Lake Eildon, Victoria. *Aust. J. Ecol.* 2, 409-18.

Collins, A.J. (1976). Inland angling in New South Wales. *N.S.W. State Fish., Res. Bull.* 14, 11 pp.

Fraser, F.J. (1969). Population density effects on survival and growth of juvenile coho salmon and steelhead trout in experimental stream channels. Pp. 253-66 in T.G. Northcote (Ed.) "Salmon and Trout in Streams". (Univ. British Columbia.)

Hume, D.J. (1979). Census of fish in the Tullaroop Creek System, Victoria. *Victoria, Fish. Wildl. Div., Fish. Wildl. Pap.* 19, 12 pp.

Lake, J.S. (1957). Trout populations and habitats in New South Wales. *Aust. J. Mar. Freshwater Res.* 8, 414-50.

Lake, J.S. (1978). "Australian Freshwater Fishes - An Illustrated Field Guide". (Nelson, Melbourne.)

Moy, D.R. (1974). Survival of trout liberated into Barkers Creek Reservoir, Harcourt. *Victoria, Fish. Wildl. Div., Freshwat. Fish. Newsl.* 6, 19-20.

Neave, F. (1953). Principles affecting the size of pink and chum salmon populations in British Columbia. *J. Fish. Res. Board Can.* 9, 450-91.

Nicholls, A.G. (1958). The population of a trout stream and the survival of released fish. *Aust. J. Mar. Freshwater Res.* 9, 319-50.

Rawstrom, R.R. (1973). Harvest, mortality and cost of three domestic strains of tagged rainbow trout stocked in large California impoundments. *Calif. Fish Game* 59, 245-65.

Shearer, K. (in press). A preliminary guide for the propogation of four Australian warmwater fishes. *N.S.W. State Fisheries, Tech. Rep.*

Tanner, R.W. (1977). The management of water storages. Pp. D1-D9 in "Freshwater '77", a symposium organised by the Victorian Piscatorial Council and the Fisheries and Wildlife Division, Victoria.

Tilzey, R.D.J. (1972). The Lake Eucumbene trout fishery. *Fisherman (N.S.W.)* 4, 1-9.

Tilzey, R.D.J. (1977). The key factors in the establishment and success of trout in Australia. *Proc. Ecol. Soc. Aust.* 10, 97-105.

Tilzey, R.D.J. (in press). Tag loss by brown trout *Salmo trutta* L., with particular reference to double tagging experiments. *J. Fish. Res. Board Can.*

Tunbridge, B.R., and Rogan, P.L. (1976). "A Guide to the Inland Angling Waters of Victoria". (Govt. Printer, Melbourne.)

Weatherley, A.H., and Lake, J.S. (1967). Introduced fish species in Australian inland waters. Pp. 217-39 in A.H. Weatherley (Ed.) "Australian Inland Waters and their Fauna". (A.N.U. Press, Canberra.)

A NOTE ON THE CHEMISTRY AND MORPHOLOGY OF BONDI LAKE, SOUTHERN NEW SOUTH WALES

by

C.R. Boylan*

Abstract

During a preliminary study of a coastal lake in southern N.S.W., the following parameters were determined: dissolved oxygen, free carbon dioxide, chloride ion, pH, total suspended solids and water temperatures. It was established that the lake was considerably deeper than the only previous survey indicated.

Introduction

During October 1978, a preliminary study was made on Bondi Lake in which selected physical and chemical parameters were investigated. Bondi Lake is a small lagoon approximately 1150 m x 550 m and roughly triangular in shape situated within the Bournda State Recreation Area located on the far south coast of New South Wales.

The Bournda State Recreation Area is a coastal reserve situated approximately 8 km east of the township of Bega and is administered by a Trust on behalf of the N.S.W. Government Lands Department.

Bondi Lake (Fig. 1) is on average 225 m from the high water mark on the adjacent ocean beach. The lake is separated from the ocean by sand dunes. The vegetation of these sand dunes includes spinifex grass, pigface, low profile wattles and ti-trees. The catchment area surrounding the lake covers approximately 2.94 km^2. Bondi lake does not appear to have been breached and open to the ocean for at least the last 50 years (Boylan, 1977).

* School of Teacher Education, Riverina C.A.E., Wagga Wagga, 2650.

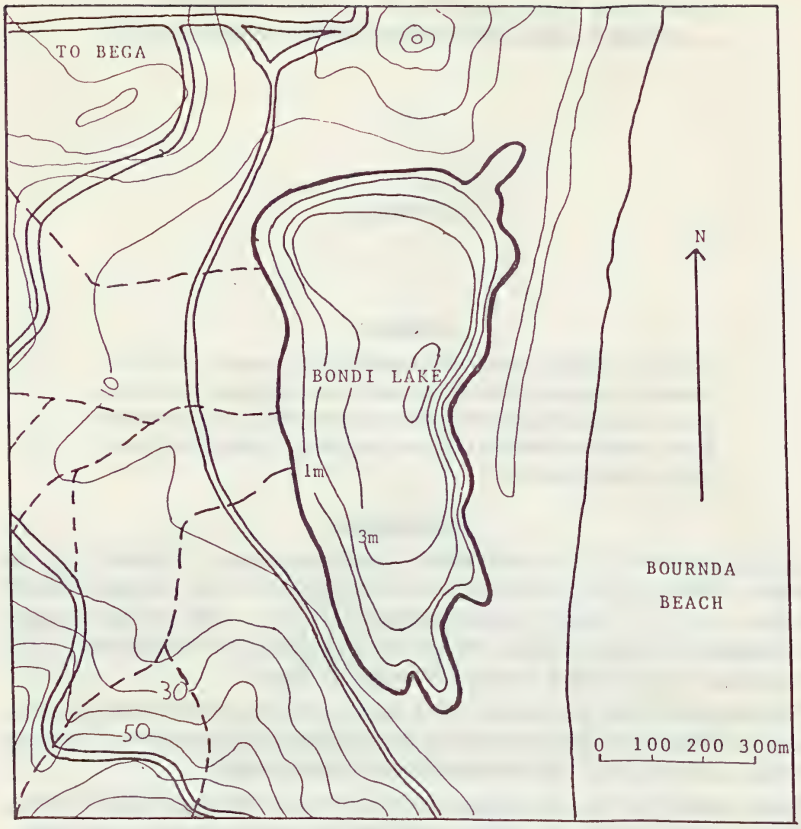

Fig. 1. Bathymetric map of Bondi Lake and part of the Bournda State Recreation Area

Chemical parameters studied included dissolved oxygen, free carbon dioxide, chloride ion, pH and total suspended solids. Water temperatures and the morphology of the lake basin were also studied.

Methods

(a) *Chemical Parameters*

1. Dissolved Oxygen. Water samples (250 ml) were collected at a depth of 25 cm from the lake. A modified version of the Winkler method was used (Fisher, 1975).
2. Free Carbon Dioxide — determined by the method of Andrews (1973).

3. Chloride Ion — determined by the method of Fisher (1975).
4. pH. Lake and sea water were tested at the lake or ocean using a "Labox" portable pH meter, model WPA C6/T.
5. Total Suspended Solids. A clean dry No. 1 "Whatman" filter paper (11 cm) was weighed and 1l of lake water filtered. The filter paper was dried and reweighed. The difference in weight gave an estimate of the total suspended solids (in p.p.m.).

(b) *Physical Parameters*

Morphology of the lake basin. Eight traverses, about 150 m apart, were made across the lake from west to east commencing at the southern end of the lake. On each traverse, six depth determinations were taken at approximately equal intervals.

Water temperatures were taken from the middle of each traverse and the mean value calculated. Water samples were collected from the longest traverse of the lake.

Results

The results of the bathymetry are summarised in Fig. 1. The results of the field and laboratory analyses are summarised in Table 1.

Table 1 Some chemical parameters for Bondi Lake and for the immediately adjacent ocean.

PARAMETER	BONDI LAKE	OCEAN
Dissolved Oxygen (ppm)	3.6	
Free Carbon Dioxide (ppm)	5	
Total Suspended Solids (ppm)	30	
Mean Water Temperature (°C)	15.5	
Chloride Ion (ppm)	1,427	16,700
pH	7.4	7.9

Discussion

One aspect of this study was to provide some data pertaining to Bondi lake for the use of high school students studying at the nearby Field Studies Centre.

A previous survey of Bondi lake in 1973 by the N.S.W. Water Resources Commission found the greatest depth in the lake to be 2.1 metres. This survey was conducted at the northern end of the lake and consisted of one traverse. In this study, the deepest part of the lake located was 4.1 metres. The salinity of the lake water is considerably less than that of the sea water.

This finding, and the data from the chemical analysis, establish a base line for further longitudinal studies of the lake.

Bondi lake is surrounded on the northern, western and southern sides by hilly country, with its catchment area consisting primarily from rhyolitic lavas. The area immediately to the west of the lake (Fig. 1), approximately 0.31 km^2, has been used for the grazing of cattle.

Nitrates from cattle wastes and phosphates from fertilizers used on the paddock would, through run-off and drainage, end up in the lake. At present, a variety of birdlife, including mallard ducks *(Anas platyrhynchos),* swans *(Cygnus atratus)*, black comorants *(Phalacrocorax carbo),* eastern and crimson rosellas *(Platycerus eximius* and *Platycerus elegans)* and black-backed magpies *(Gymnorhina tibicen),* frequent the lake for feeding and drinking purposes.

These factors would provide a source of nutrients in the lake which need further study to establish the relationships between these chemical parameters and the algal blooms observed in the lake.

Acknowledgements

I would like to acknowledge the help given by Mr. J. Miller, teacher in charge Bournda Field Studies Centre, Mr. T. D'Olivera, members of the Bournda State Recreation Area Trust and Mr. P. Collis, Biology Dept. Univ. Sydney.

References

Andrews, W.A. (1973). 'A Guide to the Study of Fresh Water Ecology' (Prentice Hall, Toronto.)

Boylan, C.R. (1977). Evaluation Report Bournda Field Studies Centre. Report to Australian Government Schools Commission.

Fisher, D.G. (1975). 'Investigating Pollution - A Practical Guide' (Heineman Educational, Melbourne.)